TECHNICAL REPORT

SIEMENS

Discipline or report series	Document number	Report number	Issue

Title

Linear Static On Car Suspension

Author(s)	Telephone:	Date
Vamshi Krishna		*22-02-26*

Summary

Additional keywords	Category
	B

1. INTRODUCTION....2
1.1. HEADER....2
1.2. MODEL CONSTRUCTION....2
1.3. MODEL SUMMARY: 2
1.4. MESHES....3
1.5. MATERIALS....4
1.6. LBC'S....4
1.7. SOLUTION & SUBCASE DETAILS 5
1.8. MODEL RESULTS....7
2. APPENDIX:....8

INTRODUCTION

1. Header

2. Model Construction

The version of Product used to create this model was **NX 12.0.1.7.**

3. Model Summary:

Solution Detail	Status
Solution Name	Solution 1
Solver	NX Nastran
Analysis Linearity	Linear
Solution Type	SOL 101 Linear Statics - Global Constraints

Table 1 Solution Summary table

Mesh Item	Count
Total element count	67795
Total node count	129357
RBE3 element count	1
Tet10 element count	67794

Table 2 Mesh Summary table

LBC	Count
Total Load count	1
Total Constraint count	7

Table 3 LBC Summary table

4. Meshes

Node Count	***129357***
Element Count	***67795***

Name	Type	Element Count	Node Count	Physical Property Name
connection_recipe_1_mesh	RBE3	1	63	None
3d_mesh(1)	CTETRA(10)	12658	24681	PSOLID1
3d_mesh(10)	CTETRA(10)	1894	3366	PSOLID9
3d_mesh(11)	CTETRA(10)	2456	4282	PSOLID9
3d_mesh(12)	CTETRA(10)	2448	4272	PSOLID9
3d_mesh(13)	CTETRA(10)	2433	4249	PSOLID9
3d_mesh(2)	CTETRA(10)	13776	27523	PSOLID2
3d_mesh(3)	CTETRA(10)	8323	14823	PSOLID3
3d_mesh(4)	CTETRA(10)	6971	13825	PSOLID4
3d_mesh(5)	CTETRA(10)	6932	13770	PSOLID5
3d_mesh(6)	CTETRA(10)	5024	9273	PSOLID6
3d_mesh(7)	CTETRA(10)	1028	2479	PSOLID8
3d_mesh(8)	CTETRA(10)	1966	3458	PSOLID9
3d_mesh(9)	CTETRA(10)	1885	3355	PSOLID9

Table 4 Mesh Summary

5. Materials

Name	Type	Referenced By
AISI_Steel_4340	Isotropic	PSOLID8 (Phys Prop) PSOLID9 (Phys Prop)
Aluminum_5086	Isotropic	PSOLID2 (Phys Prop)
Aluminum_6061	Isotropic	PSOLID1 (Phys Prop) PSOLID4 (Phys Prop) PSOLID5 (Phys Prop) PSOLID6 (Phys Prop)
Iron_Cast_G60	Isotropic	PSOLID3 (Phys Prop)

Table 5 Materials Used Summary

6. LBC's

Name	Description	Step
Cylindrical(1)		Global
Cylindrical(2)		Global
Cylindrical(3)		Global
Cylindrical(4)		Global
Cylindrical(5)		Global
Cylindrical(6)		Global
Fixed(1)		Global

Table 6 Constraints Summary table

Name	Description	Step
Force(1)		Subcase - Static Loads 1

Table 7 Loads Summary table

Name	Description	Step
Face Contact(1)		Global
Face Contact(10)		Global
Face Contact(11)		Global
Face Contact(12)		Global
Face Contact(13)		Global
Face Contact(14)		Global
Face Contact(15)		Global
Face Contact(16)		Global
Face Contact(17)		Global
Face Contact(18)		Global
Face Contact(19)		Global
Face Contact(2)		Global
Face Contact(20)		Global
Face Contact(21)		Global
Face Contact(3)		Global
Face Contact(4)		Global
Face Contact(5)		Global
Face Contact(6)		Global
Face Contact(7)		Global
Face Contact(8)		Global
Face Contact(9)		Global

Table 8 Simulation Objects Summary table

7. Solution & Subcase Details

Solution Name	Solution Description	Solver	Analysis	Solution Type
Solution 1		NX Nastran	Structural	SESTATIC 101 - Single Constraint

Table 9 Solution Details

Subcase Name	GLOBAL

Fixed(1)	Y
Cylindrical(1)	Y
Cylindrical(2)	Y
Cylindrical(3)	Y
Cylindrical(4)	Y
Cylindrical(5)	Y
Cylindrical(6)	Y

Table 10 List by Constraint

Subcase Name	GLOBAL	Subcase - Static Loads 1
Moment(1)	X	N
Force(1)	X	1.0000

Table 11 List by Load

Subcase Name	GLOBAL
Face Contact(1)	Y
Face Contact(2)	Y
Face Contact(3)	Y
Face Contact(4)	Y
Face Contact(5)	Y
Face Contact(6)	Y
Face Contact(7)	Y
Face Contact(8)	Y
Face Contact(9)	Y
Face Contact(10)	Y
Face Contact(11)	Y
Face Contact(12)	Y

Face Contact(13)	Y
Face Contact(14)	Y
Face Contact(15)	Y
Face Contact(16)	Y
Face Contact(17)	Y
Face Contact(18)	Y
Face Contact(19)	Y
Face Contact(20)	Y
Face Contact(21)	Y

Table 12 Listed by Simulation Object

8. Model Results

Solver Name and version NX NASTRAN v:12.01

2. APPENDIX:

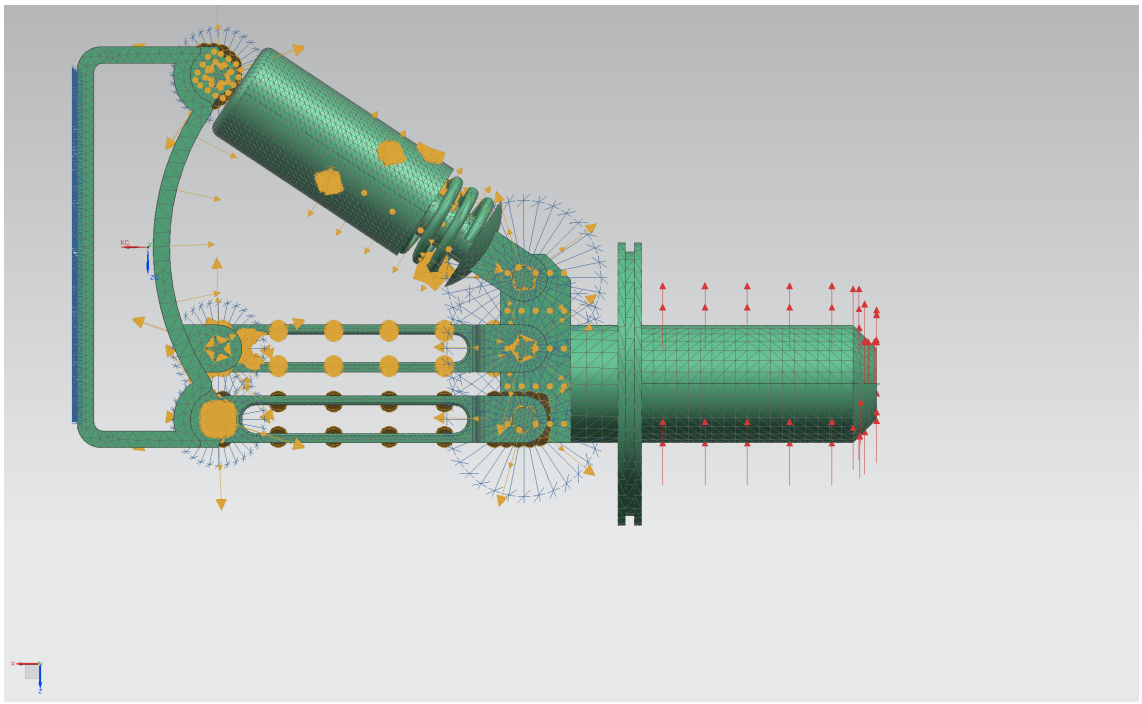

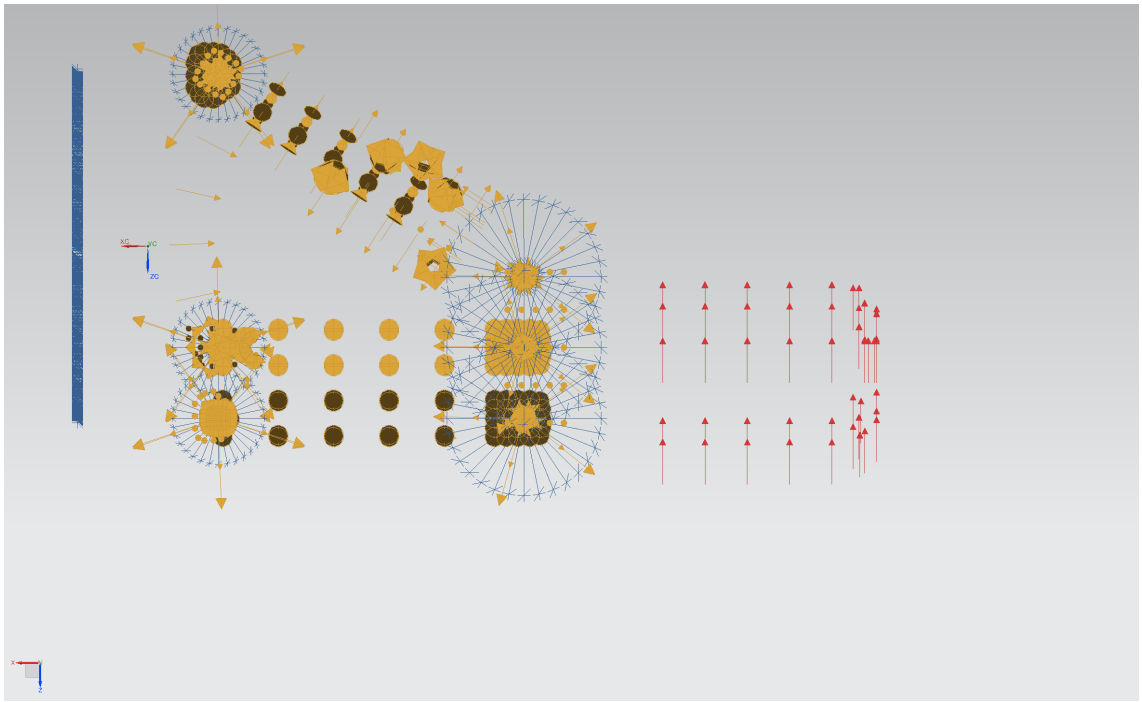

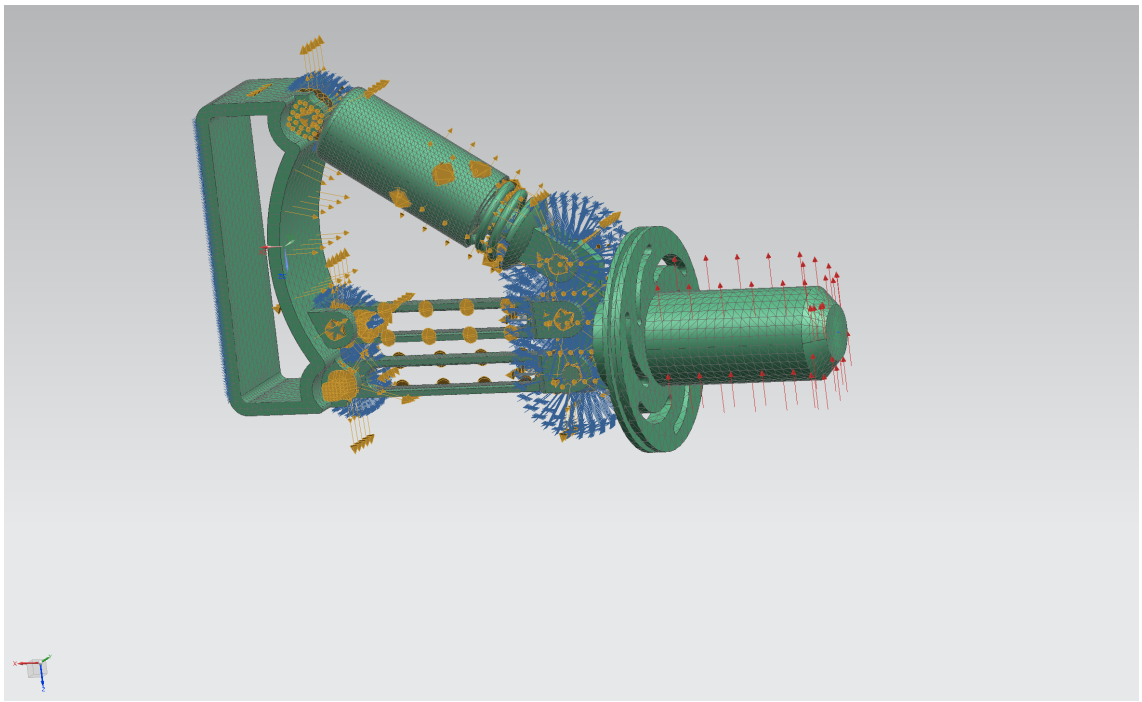

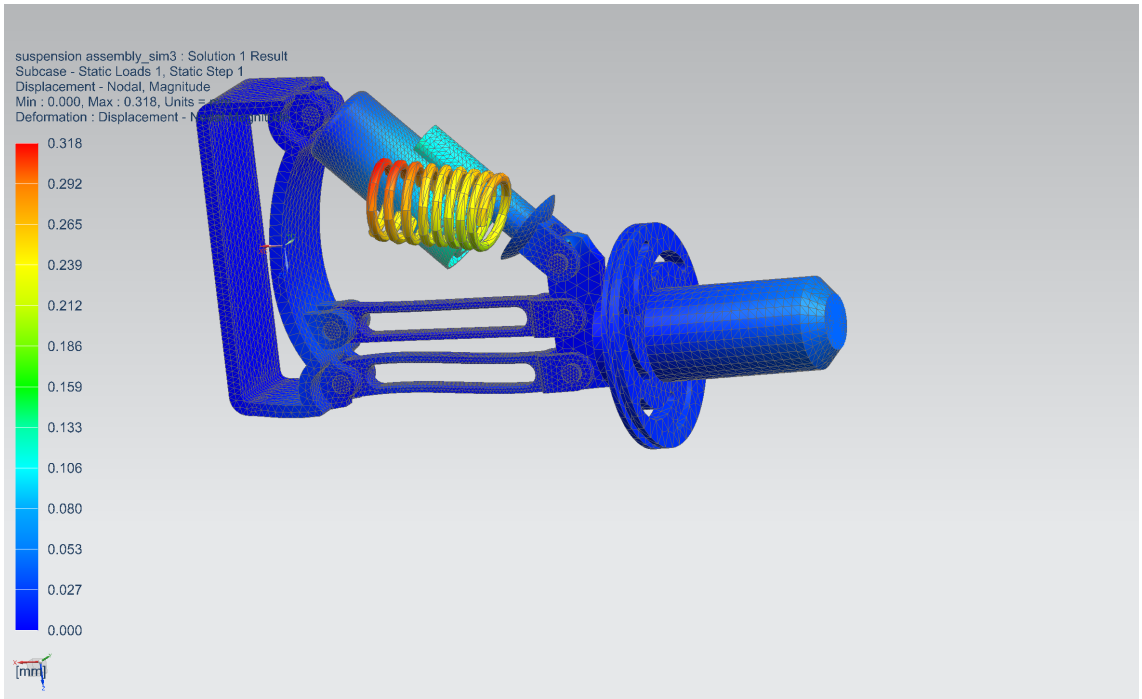
suspension assembly_sim3 : Solution 1 Result
Subcase - Static Loads 1, Static Step 1
Displacement - Nodal, Magnitude
Min : 0.000, Max : 0.318, Units =
Deformation : Displacement -
0.318
0.292
0.265
0.239
0.212
0.186
0.159
0.133
0.106
0.080
0.053
0.027
0.000
[mm]

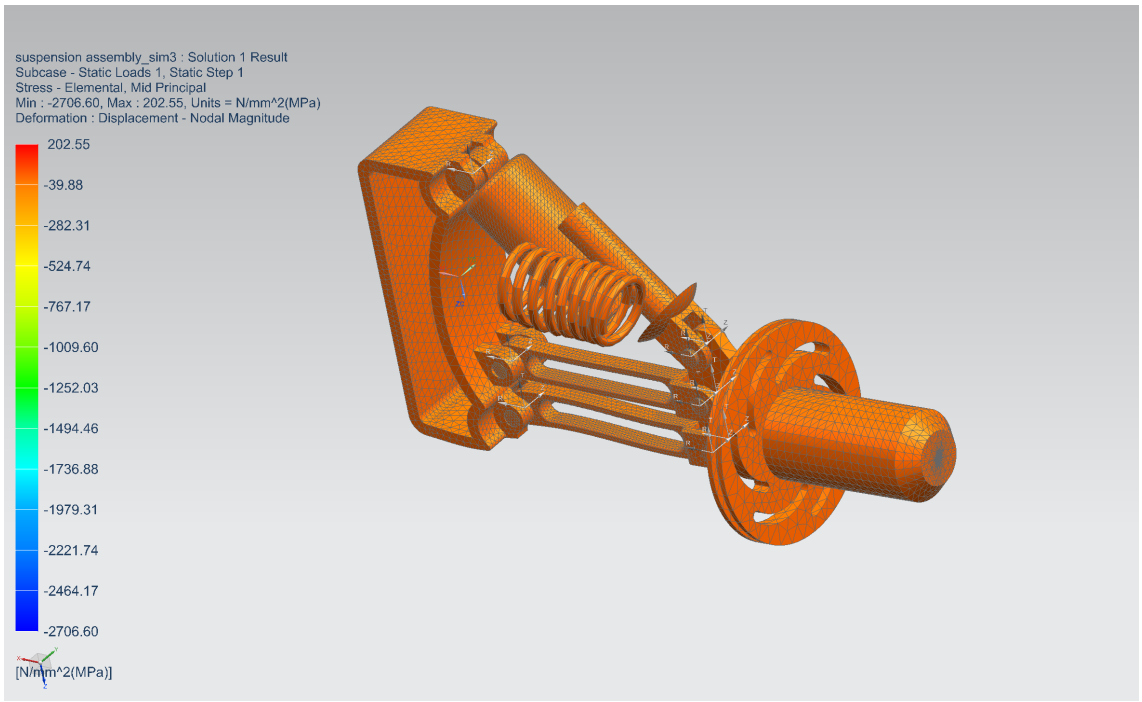
suspension assembly_sim3 : Solution 1 Result
Subcase - Static Loads 1, Static Step 1
Stress - Elemental, Mid Principal
Min : -2706.60, Max : 202.55, Units = N/mm^2(MPa)
Deformation : Displacement - Nodal Magnitude
202.55
-39.88
-282.31
-524.74
-767.17
-1009.60
-1252.03
-1494.46
-1736.88
-1979.31
-2221.74
-2464.17
-2706.60
[N/mm^2(MPa)]